S.50-806

Ideal for medium-heavy duty transportation etc. fruit & vegetables, seafood, dairy, meat and poultry and other industries that handle products requiring drainage and small openings. FDA approved

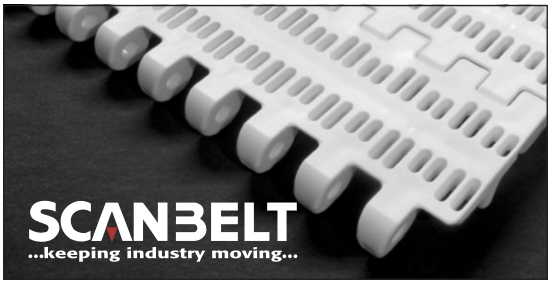

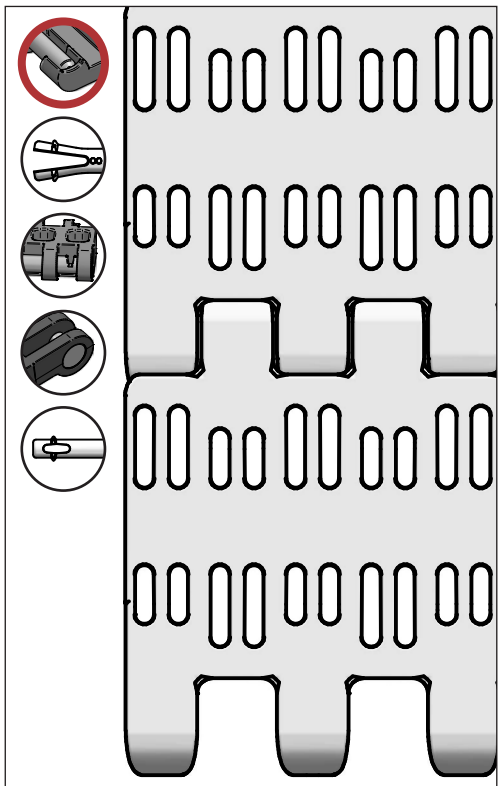

PROTECTED BY THE EU DESIGN REGISTRATION

SUGGESTED INDUSTRIES

STANDARD FEATURES

Belt surface	Open belt with a smooth surface
Open area	21 %. Biggest opening 2,5 x 11 mm
Strength	The right belt for medium-heavy transportation
Cleanability	Excellent. FSIS
Standard width	Increments of 20 mm, e.g. 100, 120 mm etc.

BELT DATA

Belt materials	Temperature range		Max. belt pull kg/m of width	Belt weight kg/m²	Belt weight kg/m² w. steel rods	Standard Colours
	Min.	Max.				
PE	- 73	66	1200	7	11	Blue/Natural
PP	+ 5	100	1400	7	11	Blue/White/Grey
POM	- 43	95	2060	10	14	Blue/Natural

ACCESSORIES

Type	mm
Flights	3, 25*, 50*, 75*, 100*
Scoop Flights	50, 75, 100*, 150*
Bent Flights	75*, 100*
Supported Flights	75, 100, 150
Flights fitted with a Round Top	Yes
Side Guard	50, 75, 100, 150
Friction Top	Yes
Hold-downs	Yes

*Modules can be supplied with a moulded indent of 40 mm.

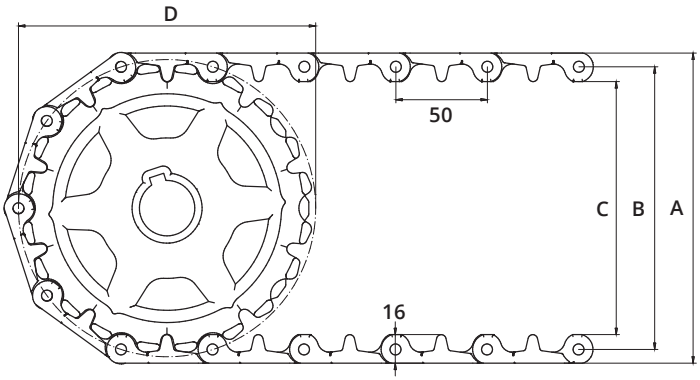

SPROCKET DATA

A = Outside, B = Pitch, C = Inside, D = Pitch Circle Diameter

No. Teeth	A	B	C	D	Hub Width	Round Bore		Square Bore	
	mm	mm	mm	mm	mm	mm	Inch	mm	Inch
6	105	89	73	100	20	20 / 25 / 30 / 40	¾ / 1 / 1¼	25 / 40	1½
8	138	122	106	132	35	25 / 30 / 40	1 / 1¼	25 / 40	1½
10	172	156	140	162	35	20 / 25 / 30 / 40 / 50 / 60 / 80	1 / 1¼	25 / 40 / 60	1½ / 2½
12	205	189	173	195	35	20 / 25 / 30 / 40 / 50 / 60 / 80	1 / 1¼	25 / 40 / 60	1½ / 2½